2. Specifications

2.1 Specification Sheet

Model			GWH09AGA-K6DNA1A	GWH12AGB-K6DNA1A
Product Code			CB385001000	CB385001700
Power Supply	Rated Voltage	V~	220-240	220-240
	Rated Frequency	Hz	50	50
	Phases		1	1
Power Supply Mode			Outdoor	Outdoor
Cooling Capacity		W	2500	3200
Heating Capacity		W	2800	3400
Cooling Power Input		W	720	991
Heating Power Input		W	750	916
Cooling Power Current		A	3.2	4.4
Heating Power Current		A	3.2	4
Rated Input		W	1500	1500
Rated Current		A	6	6
Rated Heating Current		A	7.5	7.5
Air Flow Volume(SS/H/MH/M/ML/L/SL)		m^3/h	500/470/430/390/320/270/250	590/520/480/400/350/320/280
Dehumidifying Volume		L/h	0.6	1.4
EER		W/W	3.47	3.23
COP		W/W	3.73	3.71
SEER		W/W	6.5	6.1
SCOP(Average/Warmer/Colder)			4/5.1/-	4/5.1/-
HSPF			/	/
Application Area		m^2	10-16	15-22
Indoor Unit	Indoor Unit Model		GWH09AGA-K6DNA1A/I	GWH12AGB-K6DNA1A/I
	Indoor Unit Product Code		CB385N01000	CB385N01700
	Fan Type		Cross-flow	Cross-flow
	Diameter Length(DXL)	mm	Φ93X505	Φ93X633.5
	Fan Motor Cooling Speed(SS/H/MH/M/ML/L/SL)	r/min	1300/1200/1120/1050/920/800/750	1350/1200/1120/1050/950/850/750
	Fan Motor Heating Speed(SS/H/MH/M/ML/L/SL)	r/min	1300/1200/1120/1050/950/850/800	1350/1200/1120/1050/990/920/850
	Output of Fan Motor	W	20	20
	Fan Motor RLA	A	0.22	0.22
	Fan Motor Capacitor	μF	1	1
	Input of Heater	W	/	/
	Evaporator Form		Aluminum Fin-copper Tube	Aluminum Fin-copper Tube
	Pipe Diameter	mm	Φ5	Φ5
	Row-fin Gap	mm	2-1.4	2-1.4
	Coil Length (LXDXW)	mm	509X22.8X266.7	584X22.8X266.7
	Swing Motor Model		MP24AK/MP24BA/MP24HF	MP24AK/MP24BA/MP24HF
	Output of Swing Motor	W	1.5/1.5/1.5	1.5/1.5/1.5
	Fuse	A	3.15	3.15
	Sound Pressure Level(SS/H/MH/M/ML/L/SL)	dB (A)	Cooling:38/36/34/32/28/25/24 Heating:37/36/34/33/30/26/25	Cooling:41/37/35/33/30/26/24 Heating:41/37/35/33/31/28/25
	Sound Power Level(SS/H/MH/M/ML/L/SL)	dB (A)	Cooling:55/48/46/44/40/37/36 Heating:49/48/46/45/42/38/37	Cooling:56/49/47/45/42/38/36 Heating:53/49/47/45/43/40/37
	Dimension (WXHXD)	mm	704X260X185	779X260X185
	Dimension of Carton Box (LXWXH)	mm	748X316X247	823X316X247
	Dimension of Package (LXWXH)	mm	753X332X258	828X332X258
	Net Weight	kg	7.5	8
	Gross Weight	kg	9	9.5

Outdoor Unit	Model of Outdoor Unit		GWH09AGA-K6DNA1A/O	GWH12AGB-K6DNA1A/O
	Product Code of Outdoor Unit		CB385W01000	CB385W01700
	Compressor Manufacturer/Trademark		ZHUHAI LANDA COMPRESSOR CO.,LTD	ZHUHAI LANDA COMPRESSOR CO., LTD
	Compressor Model		FTz-AN075ACBF-A	FTz-AN088ACBF-A
	Compressor Oil		FW68DA	FW68DA
	Compressor Type		Rotary	Rotary
	L.R.A.	A	20.00	/
	Compressor RLA	A	3.00	3.60
	Compressor Power Input	W	633	758
	Overload Protector		/	/
	Throttling Method		Capillary	Capillary
	Operation Temp	°C	16~30	16~30
	Ambient Temp (Cooling)	°C	-15~43	-15~43
	Ambient Temp (Heating)	°C	-15~24	-15~24
	Condenser Form		Aluminum Fin-copper Tube	Aluminum Fin-copper Tube
	Pipe Diameter	mm	Φ7	Φ7
	Rows-fin Gap	mm	1-1.4	1-1.4
	Coil Length (LXDXW)	mm	700X19.05X528	700X19.05X528
	Fan Motor Speed	rpm	900	900
	Output of Fan Motor	W	30	30
	Fan Motor RLA	A	0.40	0.40
	Fan Motor Capacitor	μF	/	/
	Air Flow Volume of Outdoor Unit	m^3/h	2200	2200
	Fan Type		Axial-flow	Axial-flow
	Fan Diameter	mm	Φ400	Φ400
	Defrosting Method		Automatic Defrosting	Automatic Defrosting
	Climate Type		T1	T1
	Isolation		I	I
	Moisture Protection		IPX4	IPX4
	Permissible Excessive Operating Pressure for the Discharge Side	MPa	4.3	4.3
	Permissible Excessive Operating Pressure for the Suction Side	MPa	2.5	2.5
	Sound Pressure Level (H/M/L)	dB (A)	51/-/-	51/-/-
	Sound Power Level (H/M/L)	dB (A)	62/-/-	64/-/-
	Dimension (WXHXD)	mm	732X550X330	732X550X330
	Dimension of Carton Box (LXWXH)	mm	789X390X600	789X390X600
	Dimension of Package (LXWXH)	mm	792X393X615	792X393X615
	Net Weight	kg	25	25
	Gross Weight	kg	27.5	27.5
	Refrigerant		R32	R32
	Refrigerant Charge	kg	0.5	0.55
Connection Pipe	Length	m	5	5
	Gas Additional Charge	g/m	16	16
	Outer Diameter Liquid Pipe	inch	1/4	1/4
	Outer Diameter Gas Pipe	inch	3/8	3/8
	Max Distance Height	m	10	10
	Max Distance Length	m	15	15
	Note: The connection pipe applies metric diameter.			

The above data is subject to change without notice; please refer to the nameplate of the unit.

2.2 Capacity Variation Ratio According to Temperature

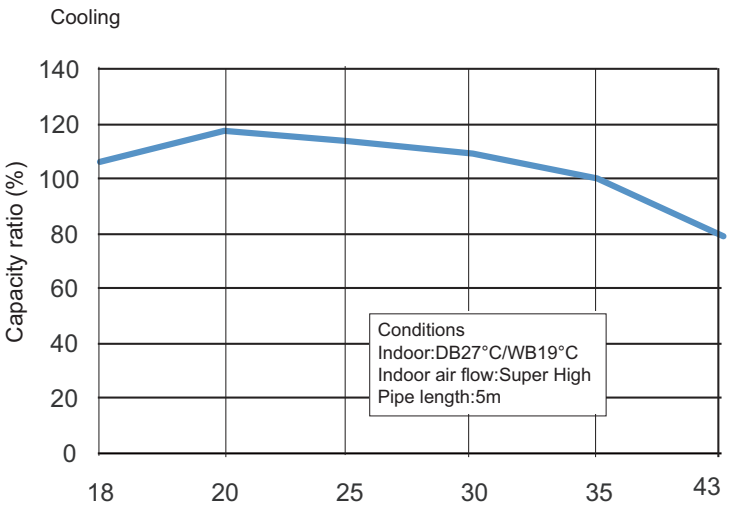

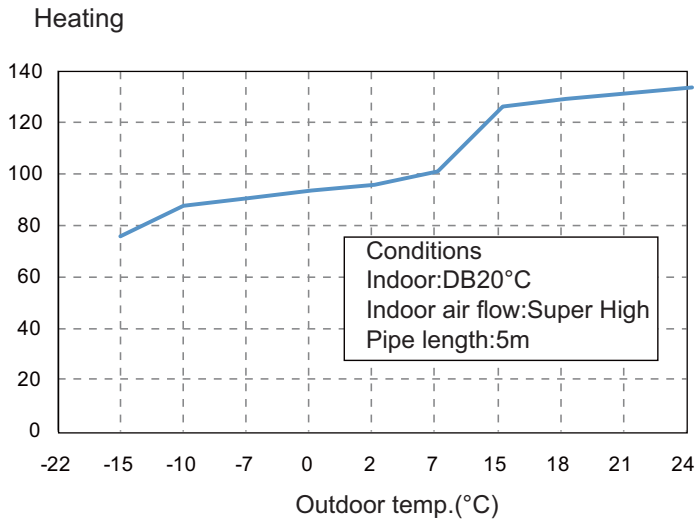

2.3 Cooling and Heating Data Sheet in Rated Frequency

Cooling:

Rated cooling condition(°C) (DB/WB)		Model	Pressure of gas pipe connecting indoor and outdoor unit	Inlet and outlet pipe temperature of heat exchanger		Fan speed of indoor unit	Fan speed of outdoor unit
Indoor	Outdoor		P (MPa)	T1 (°C)	T2 (°C)		
27/19	35/24	09K	0.8~1.1	12 to 15	65 to 38	TURBO	High
		12K		11 to 14	64 to 37		
		18K	0.9~1.1	12 to 14	75 to 37		
		24K	0.8 ~ 1.0	10 to 12	72 to 40		

Heating:

Rated cooling condition(°C) (DB/WB)		Model	Pressure of gas pipe connecting indoor and outdoor unit	Inlet and outlet pipe temperature of heat exchanger		Fan speed of indoor unit	Fan speed of outdoor unit
Indoor	Outdoor		P (MPa)	T1 (°C)	T2 (°C)		
20/-	7/6	09K	2.8~3.2	35 to 63	2 to 5	TURBO	High
		12K		35 to 65	2 to 5		
		18K	2.2~2.4	70 to 40	1 to 5		
		24K	2.2 t~ 2.4	70 to 40	1 to 5		

Instruction:

T1: Inlet and outlet pipe temperature of evaporator

T2: Inlet and outlet pipe temperature of condenser

P: Pressure at the side of big valve

Connection pipe length: 5 m.

3. Outline Dimension Diagram

3.1 Indoor Unit

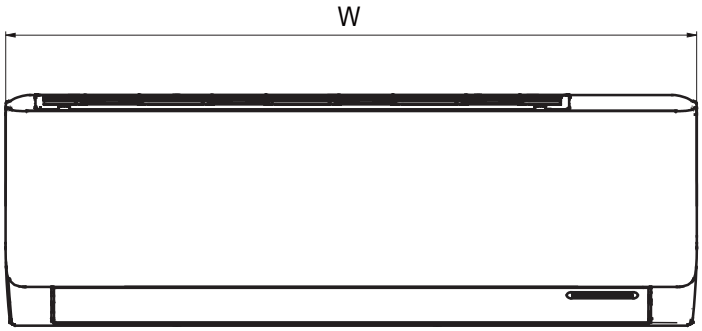

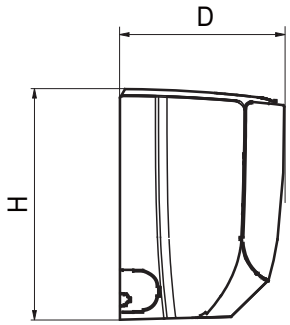

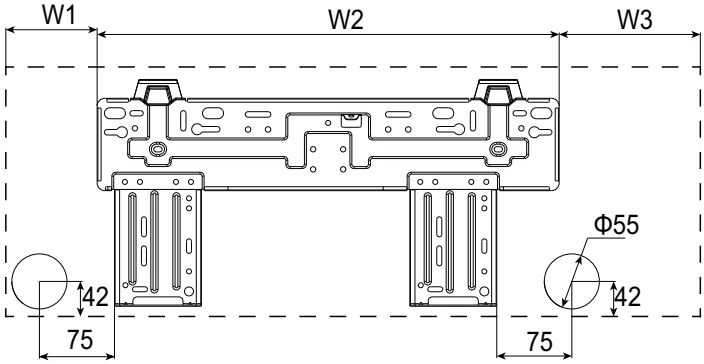

AGA/AGB

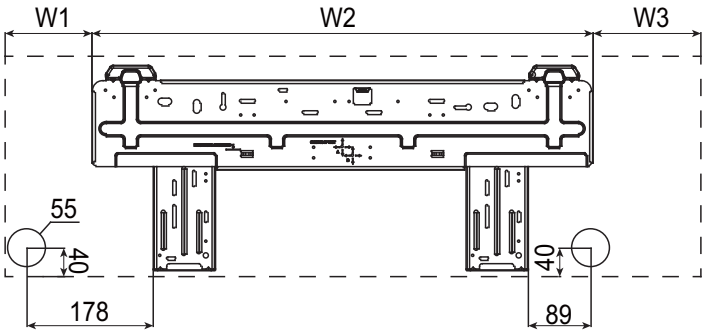

AGD

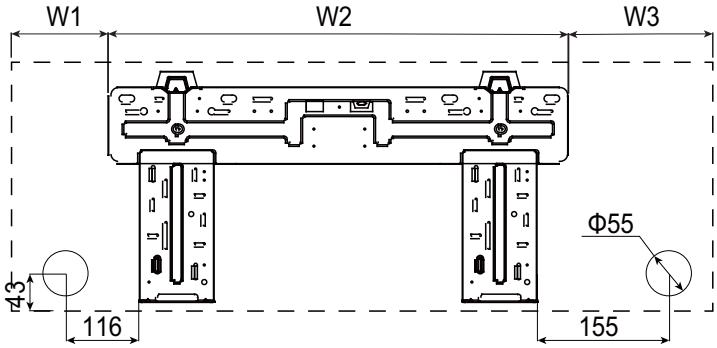

AGC

Unit:mm

Model	W	H	D	W1	W2	W3
AGA	704	260	185	93	462	149
AGB	779	260	185	133.5	462	183.5
AGC	825	293	196	113	542	170
AGD	982	311	221	122.5	707.5	152

3.2 Outdoor Unit

09/12K

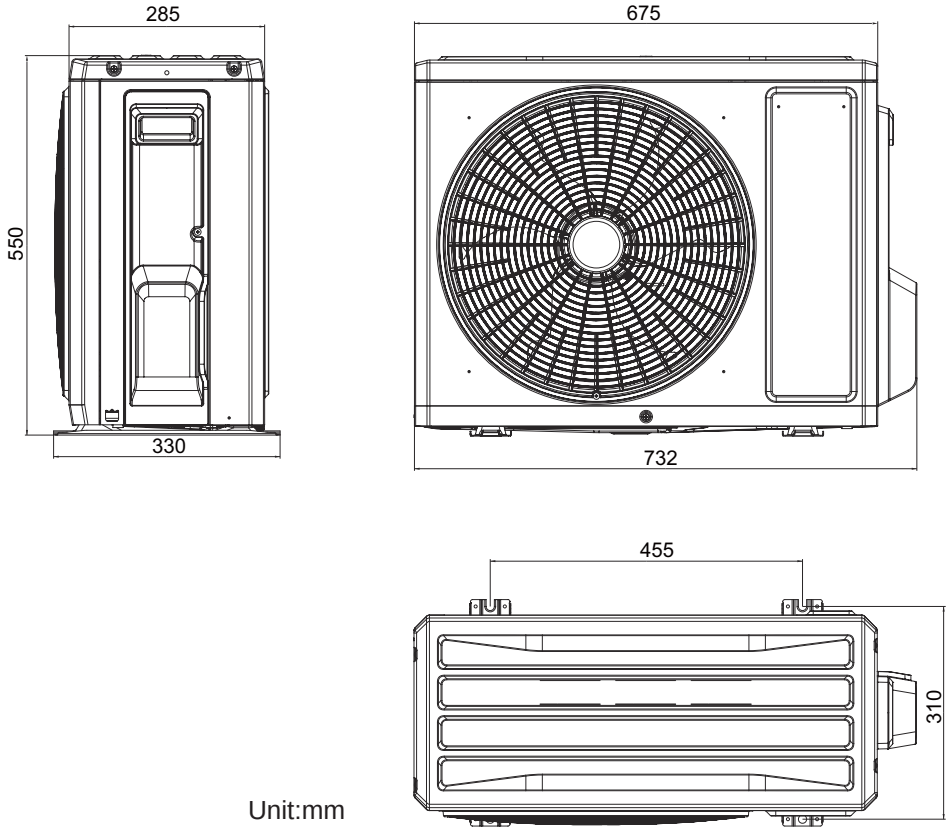

Unit:mm

18K

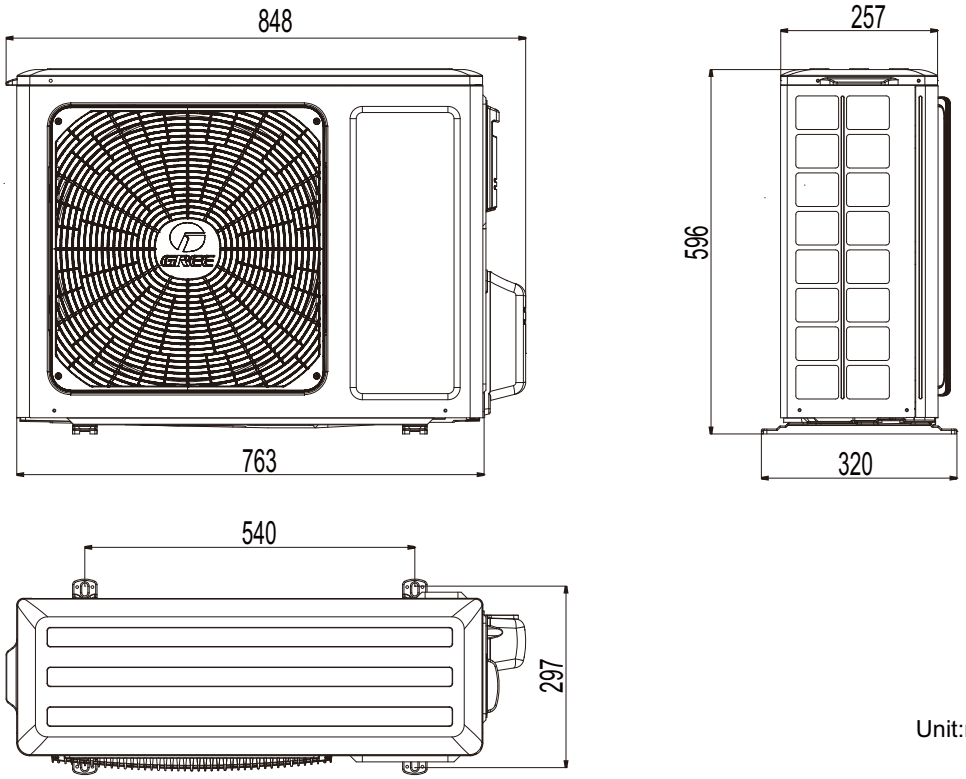

Unit:mm